CONTRACT**DESIGN**

WWW.ARREDAMENTOALBERGHI.IT MADE IN ITALY FAX +390144372092
info@mobiliperalbergo.it TEL.+393400661623

(1985-2010) ... 25° ... (of coherence)

FULL ROOM IN INTERNATIONAL STYLE COMPOSED BY:

- BEDS HEAD BOARD CM.320X100 O 220X220 THICKNESS CM.9 WITH 2 NIGHT LIGHT AND SWITCHES INSTALLED
- N° 2 NIGHT TABLE WITH DRAWERS
- WARDROBE CABINET WITH 2 SHELVES AND DIGITAL SAFE (2 CODE PASSE-PAR-TOUT)
- LUGGAGE RACK WITH PROTECTIONS
- BOISERIE CM.90X180 WITH APPEND DRESSES AND MIRROR WHOLE HEIGHT
- TOILETTE/WRITE TABLE WITH DRAWER OR
- SERVICE PROVIDED FOR INCLUSION REFRIGERATOR

Product collection MITO in laminated thickness cm.2	TOTALE	**€ 1.096**
Product collection OLIVER in laminated thickness cm.4	TOTALE	**€ 1.518**
Product collection GEOS or MAXIM in wenge or oak or cherry or walnut	TOTALE	**€ 1.789**
Classic style in lacquered wood or walnut or cherry or GEOS skin	TOTALE	**€ 2.100**

- SOMMIER SIZE 87X199X35 + MATERASS SPRING FIREPROOF CLASS 1IM each € 225
- TRANSPORT AND ASSEMBLY AND INTALLATION each € 350

- CASTOM MADE FOR MODELS ON YOUR DESIGN
- KITCHEN AND BEDS AND A TOTAL DISAPPEARANCE
- PROJECT RAISE THE PLANNING ARE FREE AND WITHOUT COMMITMENT (SEND YOUR DWG FILE)

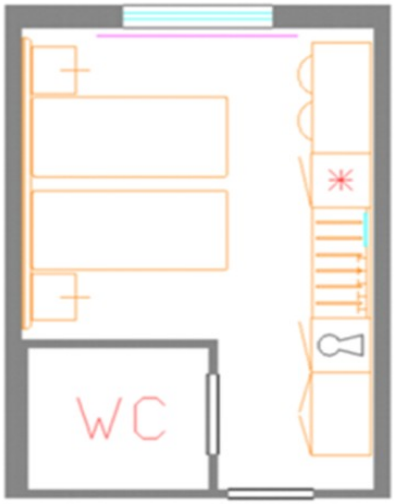

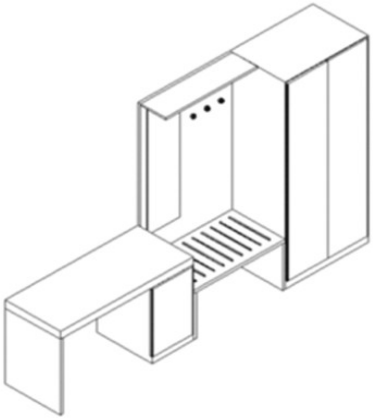

MITO

GEOS

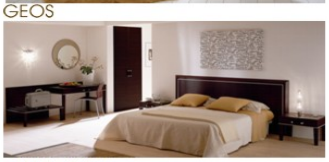

PELLE SKIN

MAXIM

CLASSIC

- CASTOM MADE: ESEGUIAMO MODELLI SU VOSTRO DISEGNO
- MONOBLOCCHI CUCINA E LETTI A SCOMPARSA TOTALE
- SOPRALLUOGO RILIEVI E PROGETTAZIONE GRATUITA E SENZA IMPEGNO